Series 1, 3 and 4 Cv = .52 — 1.3
1/8" and 1/4" Ported Manually Operated Valves

3-way/2-position, 5-way/2-position and 5-way/3-position Ports 1/8" and 1/4" NPTF

The Series 1 manual valves (1/8" & 1/4", 3-way/2-position and 5-way/2-position) and the Series 3 & 4 manual valves (1/8" & 1/4", 3-way/2-position, 5-way/2-position and 5-way/3-position) are available with actuators designed to satisfy different needs. For series 3 & 4, the 3-way/2-position valves are normally closed when P is the inlet; they can also be normally open when R is the inlet. They can be operated with vacuum down to -.9 bar (28" Hg). Additionally, the series 3 & 4 valves can be supplied with 2 different pressures into ports 3 and 5 if a cylinder requires different extend and retract forces. The series 1 valves offer a more rugged, compact design with steel operator interfaces.



TECHNICAL SPECIFICATIONS

Valve group	3-way/2-position, 5-way/2-position, 5-way/3position
Construction	Spool type Series 3 and 4, Poppet type Series 1
Mounting	Mounting holes in valve body
Materials	Anodyzed aluminum body, Stainless steel spool, Buna-N seals, Brass Poppet (Series 1)
Threaded port sizes	1/8" and 1/4" NPTF
Installation	Manifold, or single panel mount
Operating temperature	32°F - 175°F , (dry air necessary down to -4° F)
Fluid	Filtered air (25 micron or less recommended)
Lubricant	Not required; otherwise, only oil compatible with Buna-N, (3° - 10° E) (ISOVG32 grade; 32 centistokes)

PNEUMATIC DATA

Operating pressure	0 - 10 bar, (0 - 145 psi) (down to -.9 bar vacuum; 28" Hg with series 3)
Nominal pressure	6 bar, (87 psi)
Nominal flow	*Qn Series 3: 1/8" = 700 NL/min. (24.7 SCFM)
	Series 1: 1/8" = 500 NL/min. (17.65 SCFM), 1/4"=1250 NL/min. (44.14 SCFM)
	*Qn Series 4: 1/4"=1250 NL/min. (44.14 SCFM)
Nominal diameter	1/8" = 5 mm, 1/4"= 7.5 mm
Cv Rating	Series 3: 1/8" = 0.73, Series 4: 1/4" = 1.3
	Series 1: 1/8" = 0.52, 1/4" = 1.3

*Qn flowrate (SCFM) determined with a supply pressure of 6 bar (87 psi), and with a pressure drop of 1 bar (14.5 psi).
** Soft-seal repair kits are available on request.
***Dimensions are in millimeters

Dimensions in millimeters (mm)

The company reserves the right to vary models and dimensions without notice.
These products are designed for industrial applications and are not suitable for sale to the general public.

CODING OF MINIVALVES

3	3	8	-	900	TF

3	SERIES: 1 3 4
5	FUNCTION: 3 = 3/2-way NC 5 = 5/2-way 6 = 5/3-way CC 7 = 5/3-way CO
8	PORTS: 8 = 1/8 4 = 1/4
900	RESETTING: 895 = pushbutton, monostable, black 896 = pushbutton, monostable, green 897 = pushbutton, monostable, red 900 = lever, bistable 905 = lever, monostable 910 = knob, bistable 915 = knob, monostable 935 = digital monostable 975 = palm-switch, monostable, black 976 = palm-switch, monostable, green 977 = palm-switch, monostable, red 990 = switch, bistable
TF	TF = NPTF ports blank = BSP ports

Manually operated valves



Mod. 138-935TF



Mod. 138-900TF



Mod. 158-900TF



Mod. 338-990TF



Mod. 358-990TF



Mod. 338-895TF
Mod. 338-896TF
Mod. 338-897TF



Mod. 358-895TF
Mod. 358-896TF
Mod. 358-897TF



Mod. 338-975TF
Mod. 338-976TF
Mod. 338-977TF



Mod. 358-975TF
Mod. 358-976TF
Mod. 358-977TF



Mod. 338-910TF
Mod. 338-915TF



Mod. 358-910 TF
Mod. 358-915 TF



Mod. 338-900TF
Mod. 338-905TF



Mod. 358-900TF
Mod. 358-905TF



Mod. 368-900TF
Mod. 368-905TF



Mod. 378-900TF
Mod. 378-905TF



Mod. 134-935TF



Mod. 134-900TF



Mod. 154-900TF



Mod. 434-910TF
Mod. 434-915TF



Mod. 454-910TF
Mod. 454-915TF



Mod. 434-900TF
Mod. 434-905TF



Mod. 454-900TF
Mod. 454-905TF



Mod. 464-900TF
Mod. 464-905TF



Mod. 474-900TF
Mod. 474-905TF

The company reserves the right to vary models and dimensions without notice.
These products are designed for industrial applications and are not suitable for sale to the general public.

Valves Mod. 338-990TF — Cv = .73

Actuation Force at 87 psi = 4.04 lbf

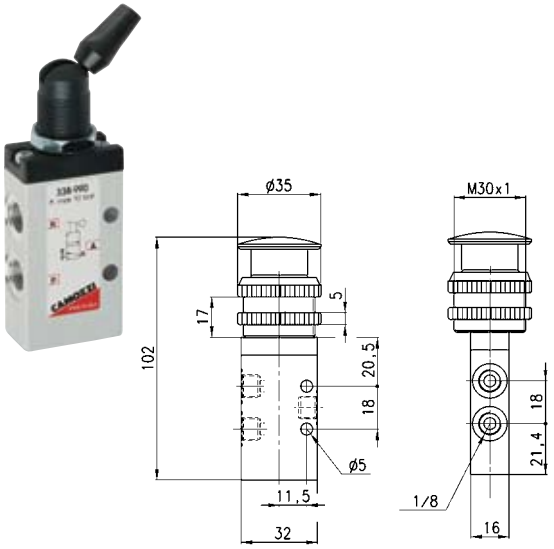

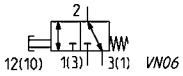

Valves Mod. 358-990TF — Cv = .73

Actuation Force at 87 psi = 4.04 lbf

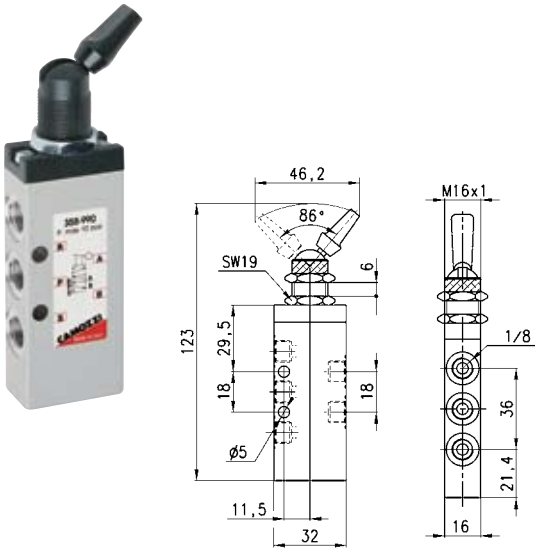

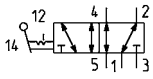

Valves Mod. 338-895TF — Cv = .73

Actuation Force at 87 psi = 7.9 lbf

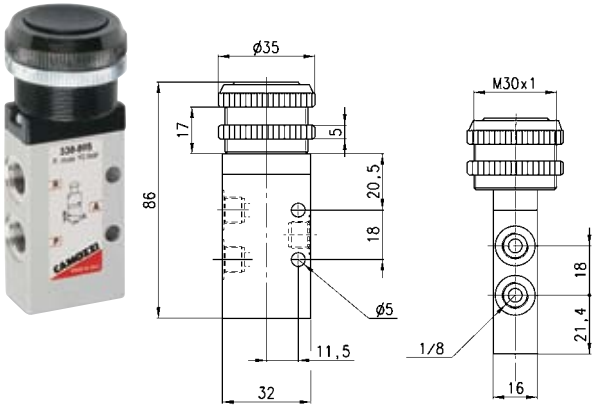

Mod.	Button Color
338-895TF	Black
338-896TF	Green
338-897TF	Red

*buttons are anodized aluminum

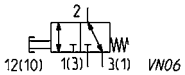

Valves Mod. 358-895TF — Cv = .73

Actuation Force at 87 psi = 7.9 lbf

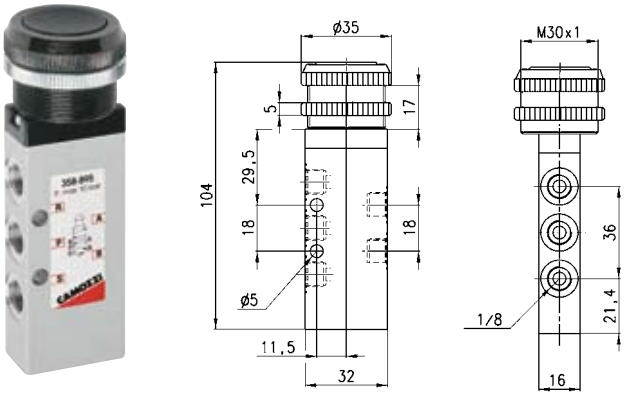

Mod.	Button Color
358-895TF	Black
358-896TF	Green
358-897TF	Red

*buttons are anodized aluminum

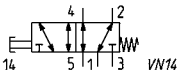

Dimensions in millimeters (mm)

The company reserves the right to vary models and dimensions without notice.
These products are designed for industrial applications and are not suitable for sale to the general public.

Valves Mod. 338-975TF Cv = .73

Actuation Force at 87 psi = 7.9 lbf

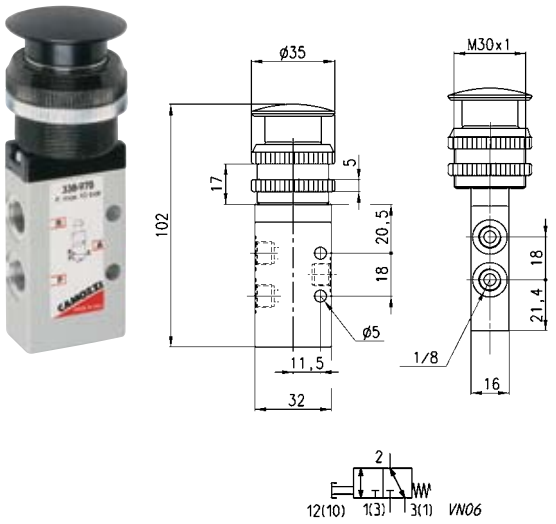

Mod.	Button Color
338-975TF	Black
338-976TF	Green
338-977TF	Red

*buttons are anodized aluminum

Valves Mod. 358-975TF Cv = .73

Actuation Force at 87 psi = 7.9 lbf

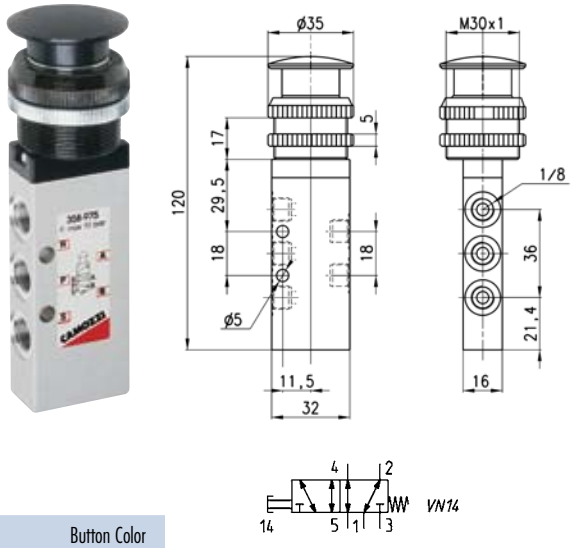

Mod.	Button Color
358-975TF	Black
358-976TF	Green
358-977TF	Red

*buttons are anodized aluminum

Valves Mod. 338-910TF and Mod. 338-915TF Cv = .73

338-910TF Actuation Force at 87 psi = 1.35 lbf
338-915TF Actuation Force at 87 psi = 7.9 lbf

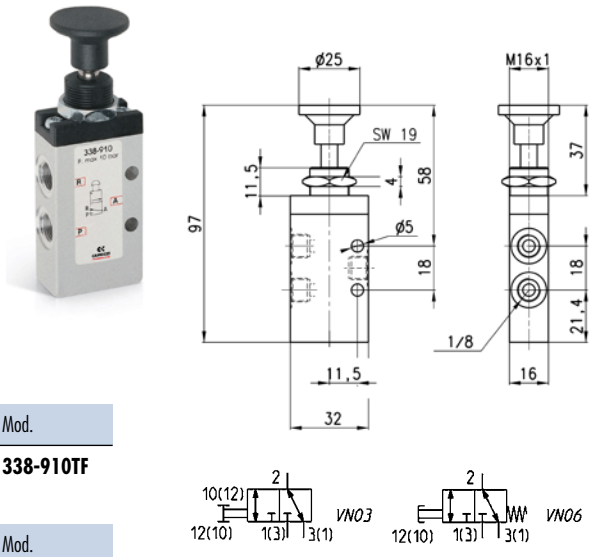

Mod.
338-910TF

Mod.
338-915TF

Valves Mod. 358-910TF and Mod. 358-915TF Cv = .73

358-910TF Actuation Force at 87 psi = 1.35 lbf
358-915TF Actuation Force at 87 psi = 7.9 lbf

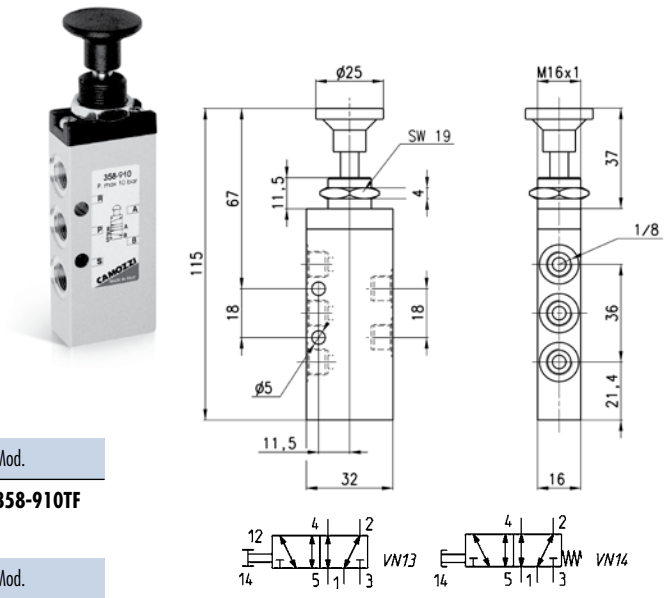

Mod.
358-910TF

Mod.
358-915TF

The company reserves the right to vary models and dimensions without notice.
These products are designed for industrial applications and are not suitable for sale to the general public.

Valves Mod. 338-900TF and Mod. 338-905TF Cv = .73

338-900TF Actuation Force at 87 psi = 1.35 lbf
338-905TF Actuation Force at 87 psi = 7.9 lbf
*Detent force can be adjusted by means of 5 spring-loaded screws on the side of handle interface

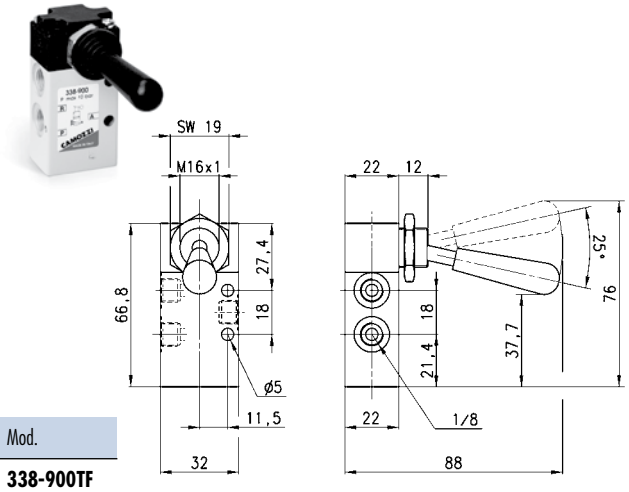

Mod.
338-900TF

Mod.
338-905TF

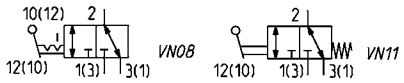

Valves Mod. 358-900TF and Mod. 358-905TF Cv = .73

358-900TF Actuation Force at 87 psi = 1.35 lbf
358-905TF Actuation Force at 87 psi = 7.9 lbf
*Detent force can be adjusted by means of 5 spring-loaded screws on the side of handle interface

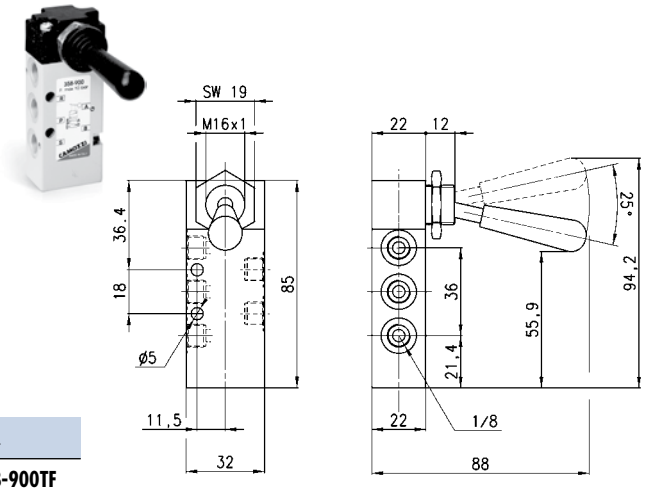

Mod.
358-900TF

Mod.
358-905TF

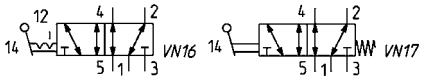

Valves Mod. 368-900TF Cv = .73

Actuation Force at 87 psi = 1.35 lbf
*Detent force can be adjusted by means of 5 spring-loaded screws on the side of handle interface

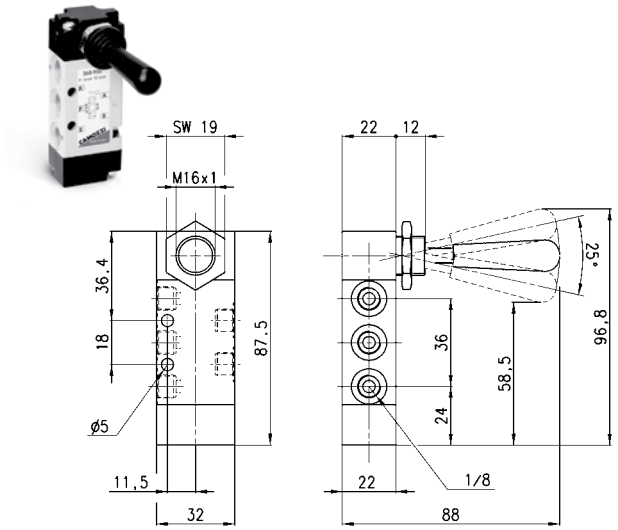

Mod.
368-900TF

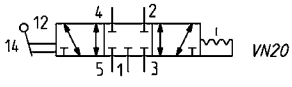

Valves Mod. 368-905TF Cv = .73

Actuation Force at 87 psi = 4.5 lbf
*Detent force can be adjusted by means of 5 spring-loaded screws on the side of handle interface

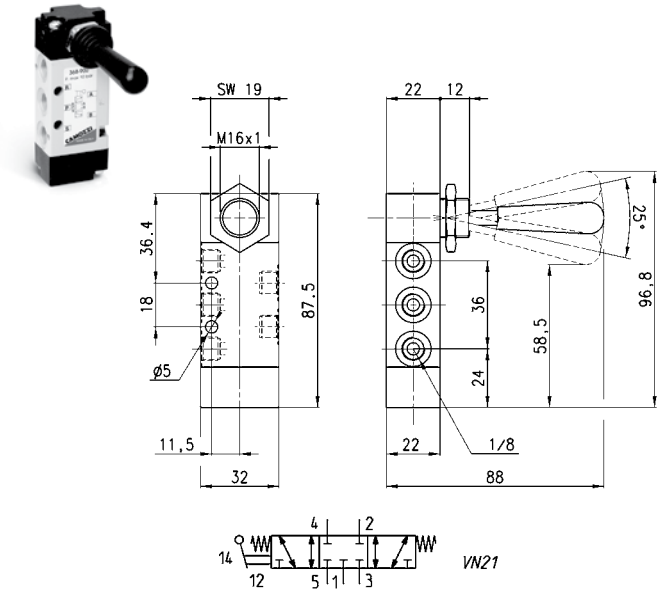

Mod.
368-905TF

The company reserves the right to vary models and dimensions without notice.
These products are designed for industrial applications and are not suitable for sale to the general public.

Valves Mod. 378-900TF Cv = .73

Actuation Force at 87 psi = 1.35 lbf
*Detent force can be adjusted by means of 5 spring-loaded screws on the side of handle interface

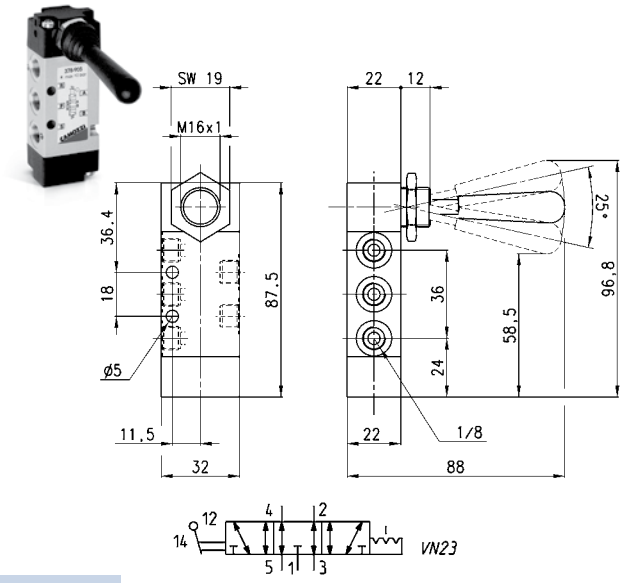

Mod.
378-900TF

Valves Mod. 378-905TF Cv = .73

Actuation Force at 87 psi = 4.5 lbf

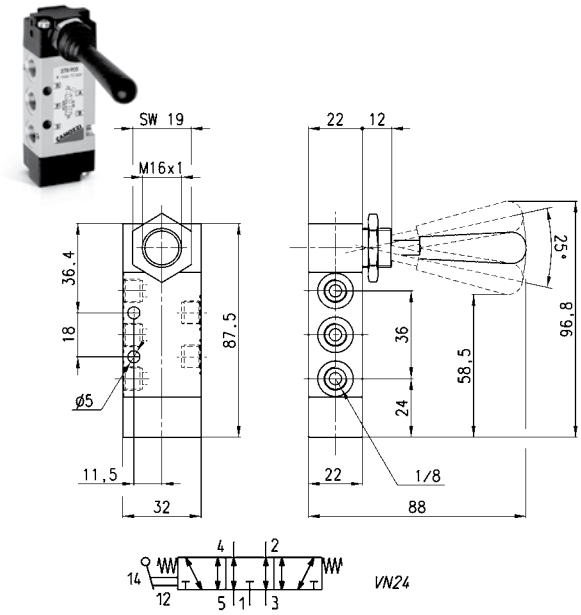

Mod.
378-905TF

The company reserves the right to vary models and dimensions without notice.
These products are designed for industrial applications and are not suitable for sale to the general public.

Valve Mod. 138-935TF — Cv = .52

Actuating force at 6 bar = 38N (8.5 lbf)
Operating pressure = 0 - 10 bar (0 - 145psi)
Flow rate = 500 Nl/min. (17.6 SCFM)

Mod.
138-935TF

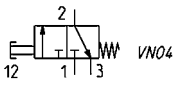



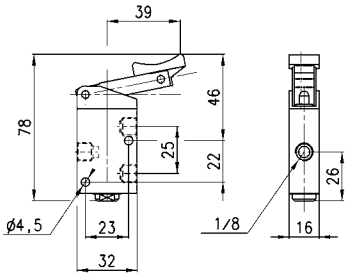

Valve Mod. 138-900TF — Cv = .52

Actuating force at 6 bar = 25N (5.6 lbf)
Operating pressure = 0 - 10 bar (0-145 psi)
Flow rate = 500 Nl/min. (17.6 SCFM)

Mod.
138-900TF

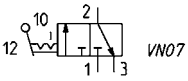



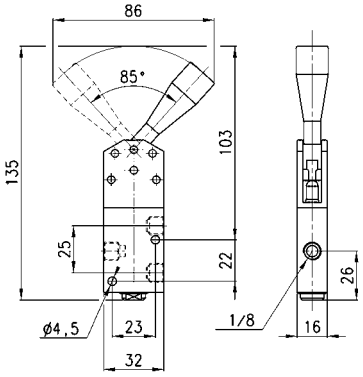

Valve Mod. 158-900TF — Cv = .52

Actuating force at 6 bar = 45N (10.1 lbf)
Operating pressure = 0 - 10 bar (0-145 psi)
Flow rate = 500 Nl/min. (17.6 SCFM)

Mod.
158-900TF

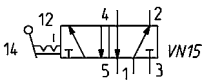



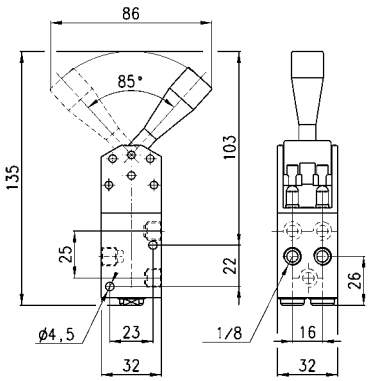

Dimensions in millimeters (mm)

The company reserves the right to vary models and dimensions without notice.
These products are designed for industrial applications and are not suitable for sale to the general public.

Valve Mod. 134-195TF — Cv = 1.3

Actuating force at 6 bar = 40N (9 lbf)
Operating pressure = 0 - 10 bar (0-145 psi)
Flow rate = 1250 Nl/min. (44.1 SCFM)



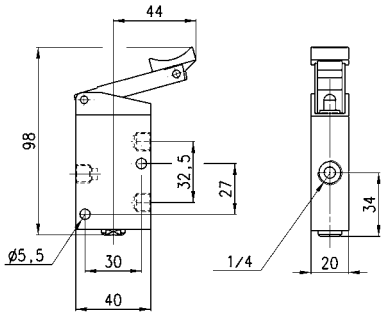

Mod.
134-935TF

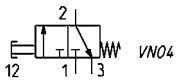

Valve Mod. 134-900TF — Cv = 1.3

Actuating force at 6 bar = 30N (6.7 lbf)
Operating pressure = 0 - 10 bar (0 - 145 psi)
Flow rate = 1250 Nl/min. (44.1 SCFM)



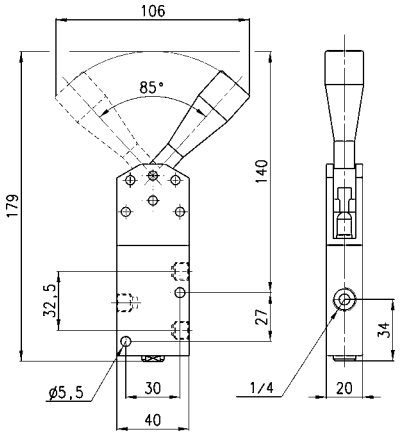

Mod.
134-900TF

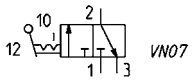

Valve Mod. 154-900TF — Cv = 1.3

Actuating force at 6 bar = 55N (12.3 lbf)
Operating pressure = 0 - 10 bar (0-145 psi)
Flow rate = 1250 Nl/min. (44.1 SCFM)



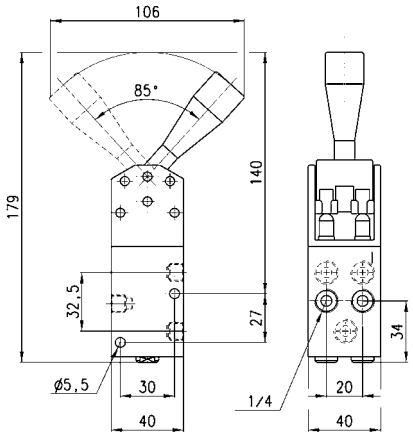

Mod.
154-900TF

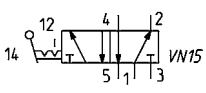

The company reserves the right to vary models and dimensions without notice.
These products are designed for industrial applications and are not suitable for sale to the general public.

Valves Mod. 434-910TF and 434-915TF Cv = 1.3

Mod. 434-910TF Actuation Force at 87 psi = 2.25 lbf
Mod. 434-915TF Actuation Force at 87 psi = 8.3 lbf

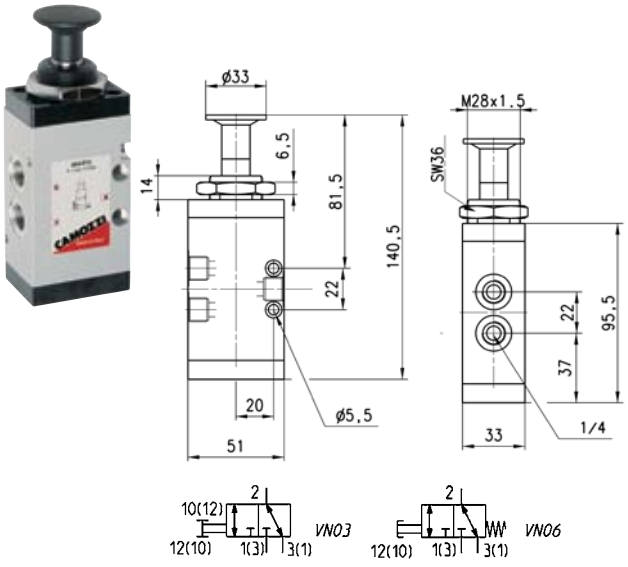

Mod.	Symbol
434-910TF	VN03
434-915TF	VN06

Valves Mod. 454-910TF and 454-915TF Cv = 1.3

Mod. 454-910TF Actuation Force at 87 psi = 2.25 lbf
Mod. 454-915TF Actuation Force at 87 psi = 8.3 lbf

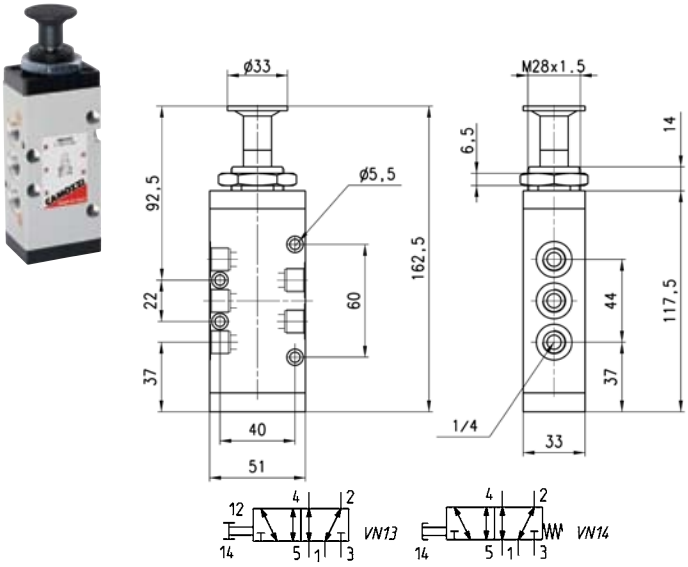

DIMENSIONS	
Mod.	Symbol
454-910TF	VN13
454-915TF	VN14

Valves Mod. 434-900TF and 434-905TF Cv = 1.3

Mod. 434-900TF Actuation Force at 87 psi = 1.35 lbf
Mod. 434-905TF Actuation Force at 87 psi = 8.3 lbf
*Detent force can be adjusted by means of 5 spring-loaded screws on the side of handle interface

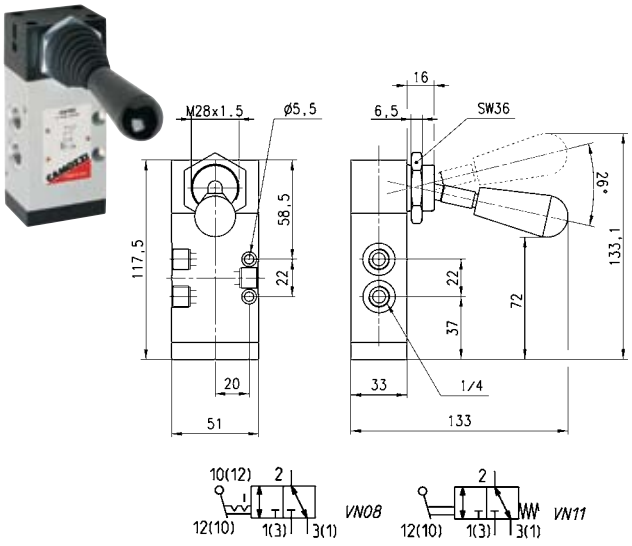

Mod.	Symbol
434-900TF	VN08
434-905TF	VN11

Valves Mod. 454-900TF and 454-905TF Cv = 1.3

Mod. 454-900TF Actuation Force at 87 psi = 1.35 lbf
Mod. 454-905TF Actuation Force at 87 psi = 8.3 lbf
*Detent force can be adjusted by means of 5 spring-loaded screws on the side of handle interface

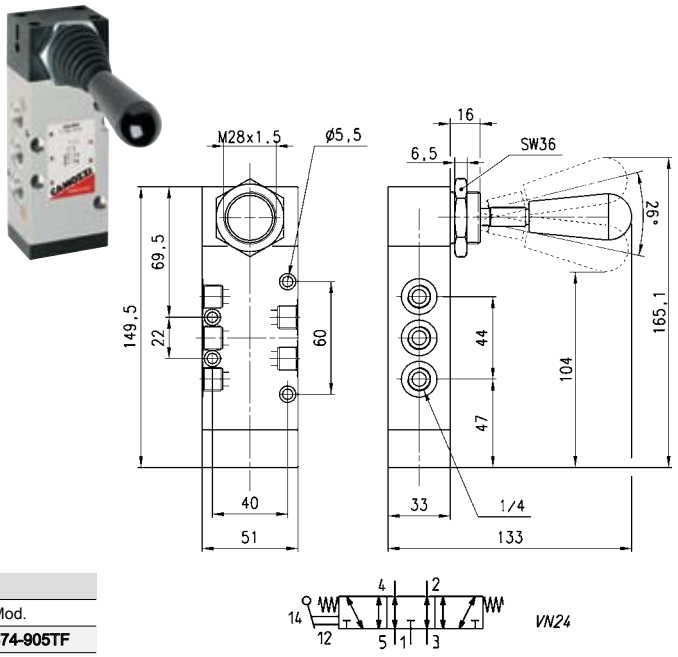

Mod.
474-905TF

Dimensions in millimeters (mm)

The company reserves the right to vary models and dimensions without notice.
These products are designed for industrial applications and are not suitable for sale to the general public.

Valves Mod. 464-900TF — Cv = 1.3

Actuation Force at 87 psi = 1.35 lbf
*Detent force can be adjusted by means of 5 spring-loaded screws on the side of handle interface

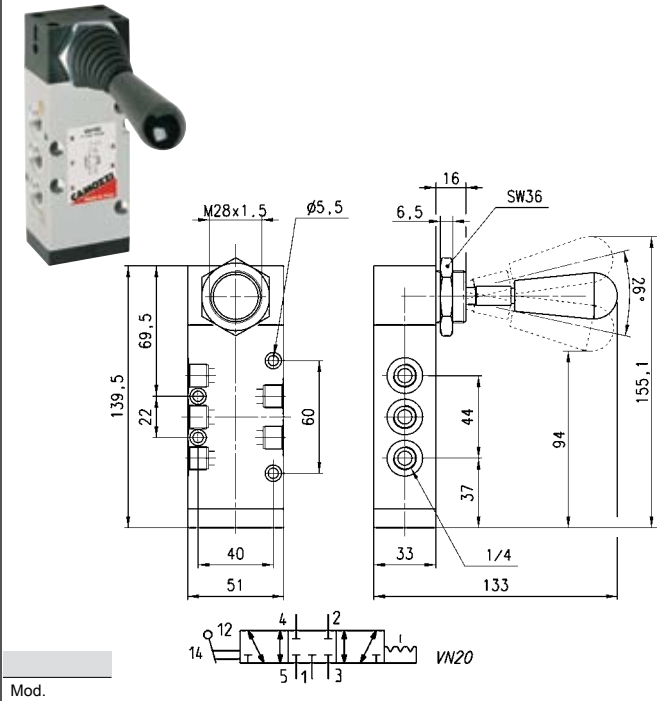

Mod.
464-900TF

Valves Mod. 464-905TF — Cv = 1.3

Actuation Force at 87 psi = 2.25 lbf

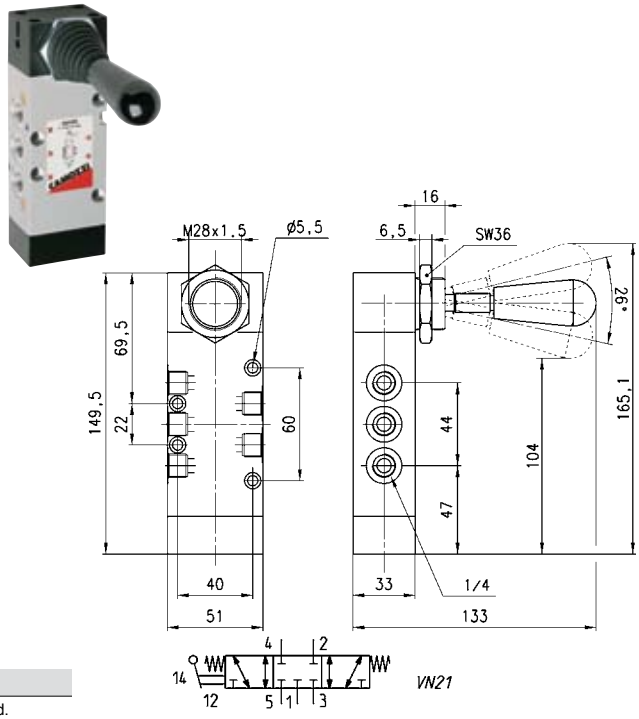

Mod.
464-905TF

Valves Mod. 474-900TF — Cv = 1.3

Actuation Force at 87 psi = 1.35 lbf
*Detent force can be adjusted by means of 5 spring-loaded screws on the side of handle interface

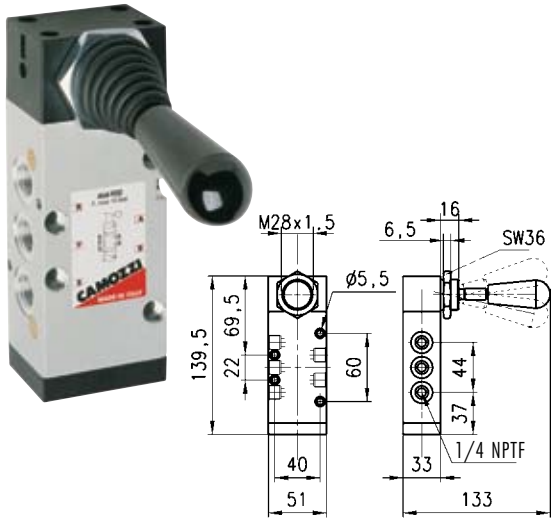

Mod.
474-900TF

Valves Mod. 474-905TF — Cv = 1.3

Actuation Force at 87 psi = 2.25 lbf

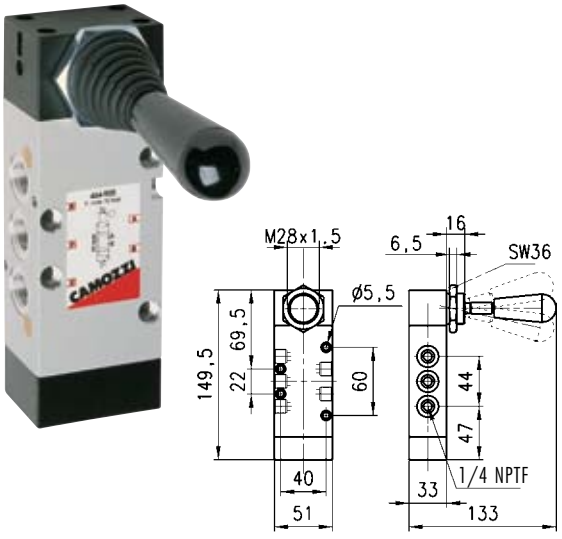

Mod.
474-905TF

The company reserves the right to vary models and dimensions without notice.
These products are designed for industrial applications and are not suitable for sale to the general public.

Series VMS Slide Valve

Cv = .73 - 4.10

Series VMS, 3-way/2-position
Ports M5, 1/8", 1/4", 3/8", 1/2", 3/4" NPTF

The VMS series slide valves are commonly used upstream of FRL units to ease repair and replacement. They can also be used in situations requiring the exhausting of all downstream air. This would assist in maintenance applications where ball valves may be too large and bulky to maneuver in tight assembly spaces. The exhausting of downstream air while simultaneously blocking inlet flow helps in building component groups to be tested in stages, and assembled later onto the main body of a machine.



TECHNICAL SPECIFICATIONS

Valve group	3-way/2-position
Construction	Shuttle slide
Mounting	In/line thread ports
Materials	Nickel-Plated brass body, Buna-N seals
Threaded port sizes	M5, 1/8", 1/4", 3/8", 1/2" 3/4" NPTF
Installation	In-line
Operating temperature	32°F - 175°F, (dry air necessary down to 14° F)
Fluid	Filtered air
Lubricant	Not required; otherwise oil compatible with Buna-N, (3°- 10° E) (ISOVG32 grade: 32 centistrokes)

PNEUMATIC DATA

Operating pressure	0 - 10 bar (0 - 145 psi))			
Nominal pressure	6 bar (87 psi)			
Nominal flow	*Qn Series VMS:	P→A M5 =	140 NL/min (4.9 SCFM)	1/8" = 600 NL/min (21.2 SCFM)
		1/4" =	1200 NL/min (42.4 SCFM)	3/8" = 2100 NL/min (74.1 SCFM)
		1/2" =	3350 NL/min (118.5 SCFM	3/4" = 5350 NL/min (189 SCFM
		A→R M5 =	145 NL/min (5.12 SCFM)	1/8" = 740 NL/min (26.2 SCFM)
		1/4" =	1780 NL/min (62.9 SCFM)	3/8" = 1830 NL/min (64.7 SCFM)
		1/2" =	4030 NL/min (142.5 SCFM)	3/4" = 5000 NL/min (176.8 SCFM)
Cv Rating (Inlet flow)	Series VMS:	M5 =	0.15	1/8" = 0.63
		1/4" =	1.26	3/8" = 2.21
		1/2" =	3.53	3/4" = 5.62

*Qn flowrate (SCFM) determined with a supply pressure of 6 bar (87 psi), and with a pressure drop of 1 bar (14.5 psi).
Exhausting flowrate (A→R), determined with an inlet pressure of 6 bar (87 psi), while exhausting to atmosphere.

Dimensions in millimeters (mm)

The company reserves the right to vary models and dimensions without notice.
These products are designed for industrial applications and are not suitable for sale to the general public.

Valves Mod. VMS



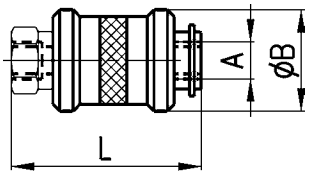

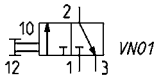

Mod.	NPTF A	ØB	L	Q* (Nl/min) 1-2 (SCFM)	Q* (Nl/min) 2-3 (SCFM)
VMS-105-M5	M5	15	33,5	140 (4.9)	145 (5.12)
VMS-118-02PT	1/8	25	48	600 (21.2)	740 (26.2)
VMS-114-04PT	1/4	30	58	1200 (42.4)	1780 (62.9)
VMS-138-06PT	3/8	35	70	2100 (74.1)	1830 (64.7)
VMS-112-08PT	1/2	40	80	3350 (118.5)	4030 (142.5)
VMS-134-12PT	3/4	49,5	83	5350 (189)	5000 (176.8)

The company reserves the right to vary models and dimensions without notice.
These products are designed for industrial applications and are not suitable for sale to the general public.